EP King series

Rossi

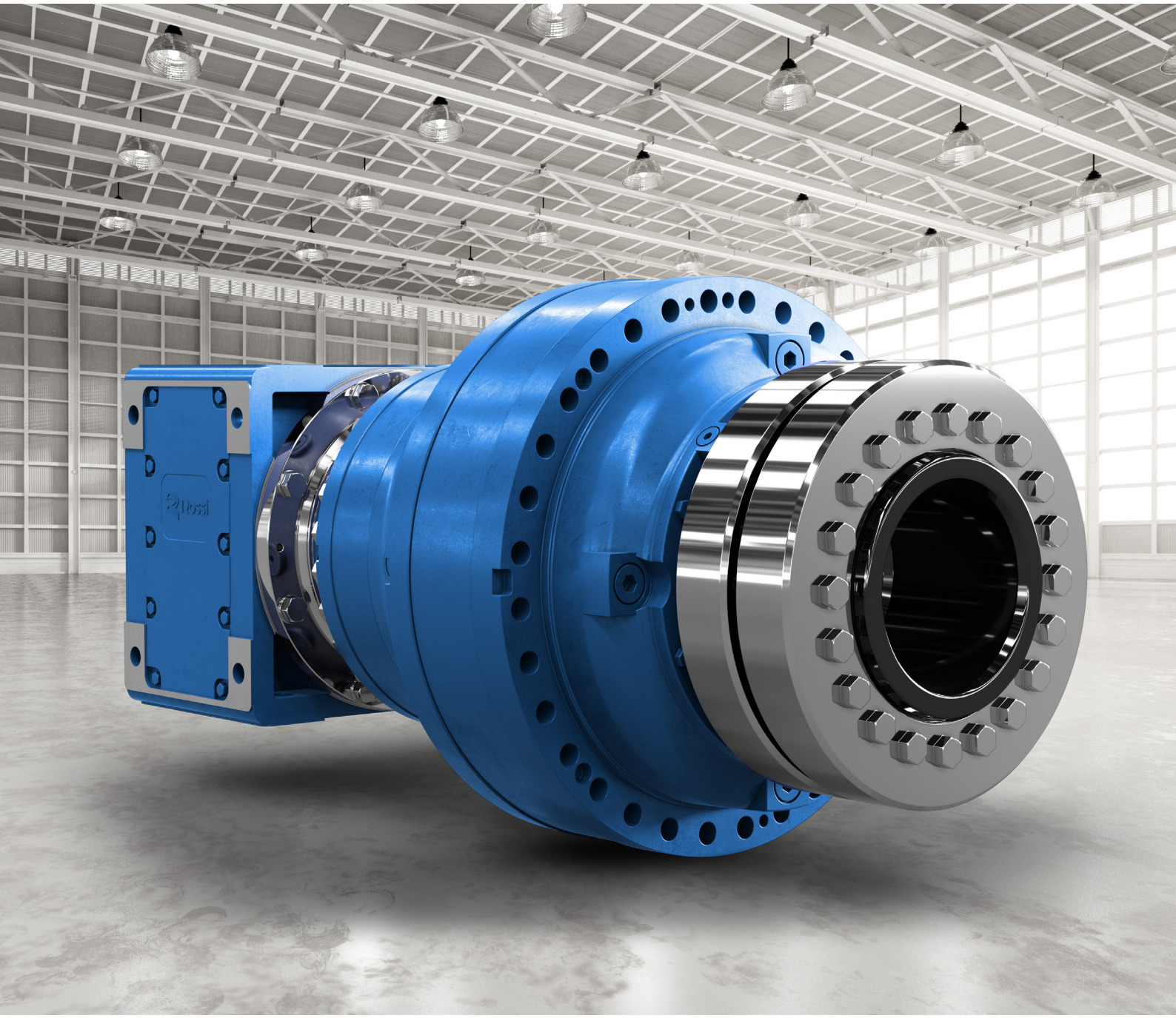

High torque and power
Planetary and Combined units

rossi.com

Rossi for You

Innovation
Rossi offers a wide range of solutions for an evolving industry, flexible and innovative gearboxes and gearmotors for customer tailored solutions to maximize performance and minimize the total cost of ownership.

High quality, 3 years warranty
Our drive is to innovate and boost operations by manufacturing performing, precise, reliable and high-quality products all over the world. We are always one step forward in offering and developing solutions that can satisfy an unlimited number of application needs, even in the most demanding conditions.

Reliability
We are a reliable company with the right flexibility and know-how to respond to worldwide market requests, in all application fields, without leaving aside our commitment for the environment and value on human safety, to protect everyone's future.

Tools and processes
We continue to invest in new tools and processes, so our highly skilled specialist team in different fields are supporting you to find the best solution suitable for your demands, always by your side on every step of the project.

After-sale service
Highly trained mechanics and support teams can ensure a fast and efficient after-sale service providing support worldwide.

Digital support
Alongside our 24/7 Rossi for You support portal you have a suite of digital support tools enabling real time access to your order tracking, invoices, spare part tables download and contact to our service.

70
YEARS

Experience
Shaped by more than 70 years of history Rossi meets your unique needs whether you need a standard design or a customized solution.

Rossi

Global presence local service

Local support
Sales, customer service, technical support, spare parts

17 branches*

Worldwide distribution network*

A global network of subsidiaries and dealers. From design and execution to after-sales service. Rossi is always close to you: a local, reliable and flexible partner.

Alongside our 24/7 **Rossi for You** portal you have a suite of digital support tools enabling real time access to your order tracking, invoices, spare part tables download and contact to our service.

*All contacts available on **www.rossi.com**

Main offices | Affiliated companies | Production facilities/Assembly plants

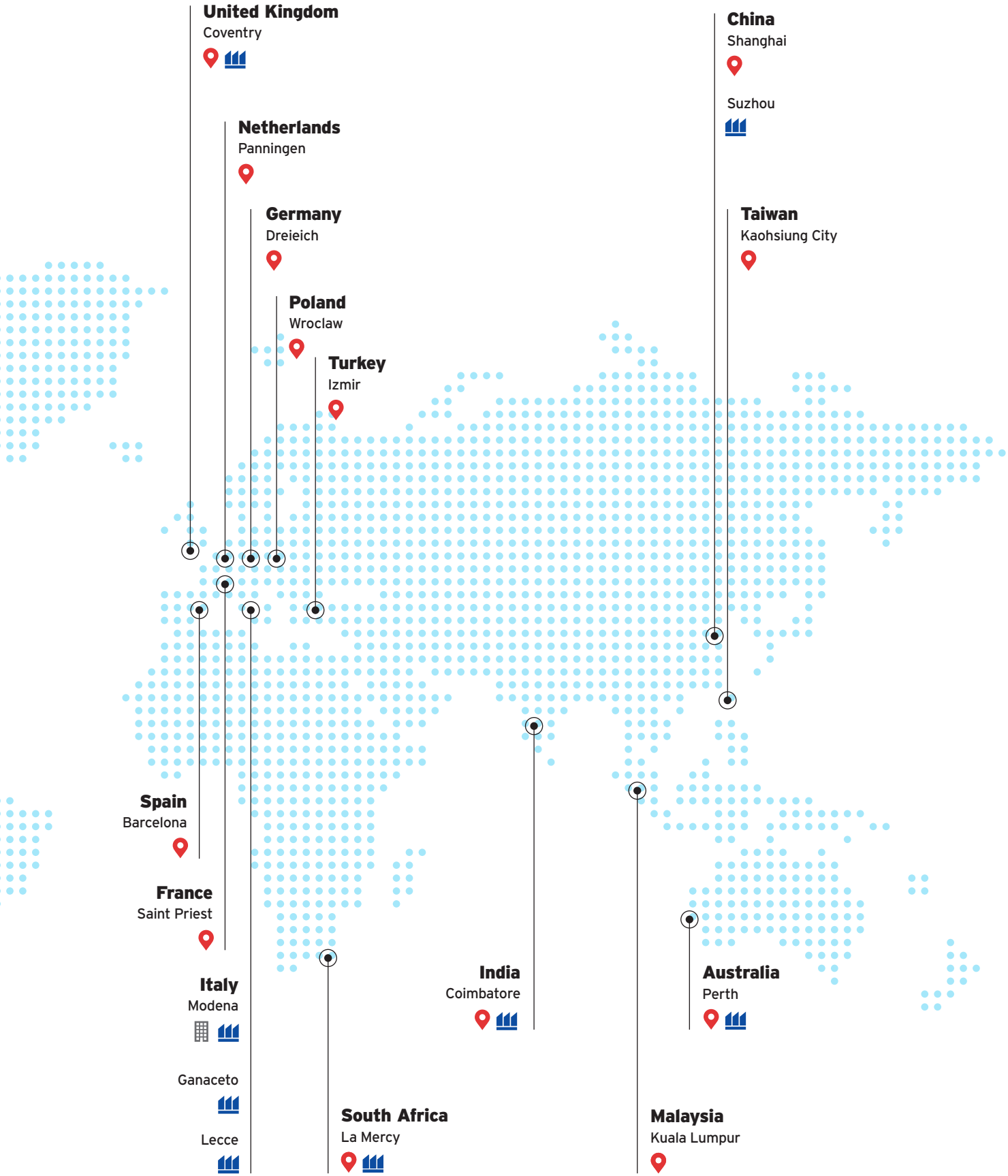

Features and benefits

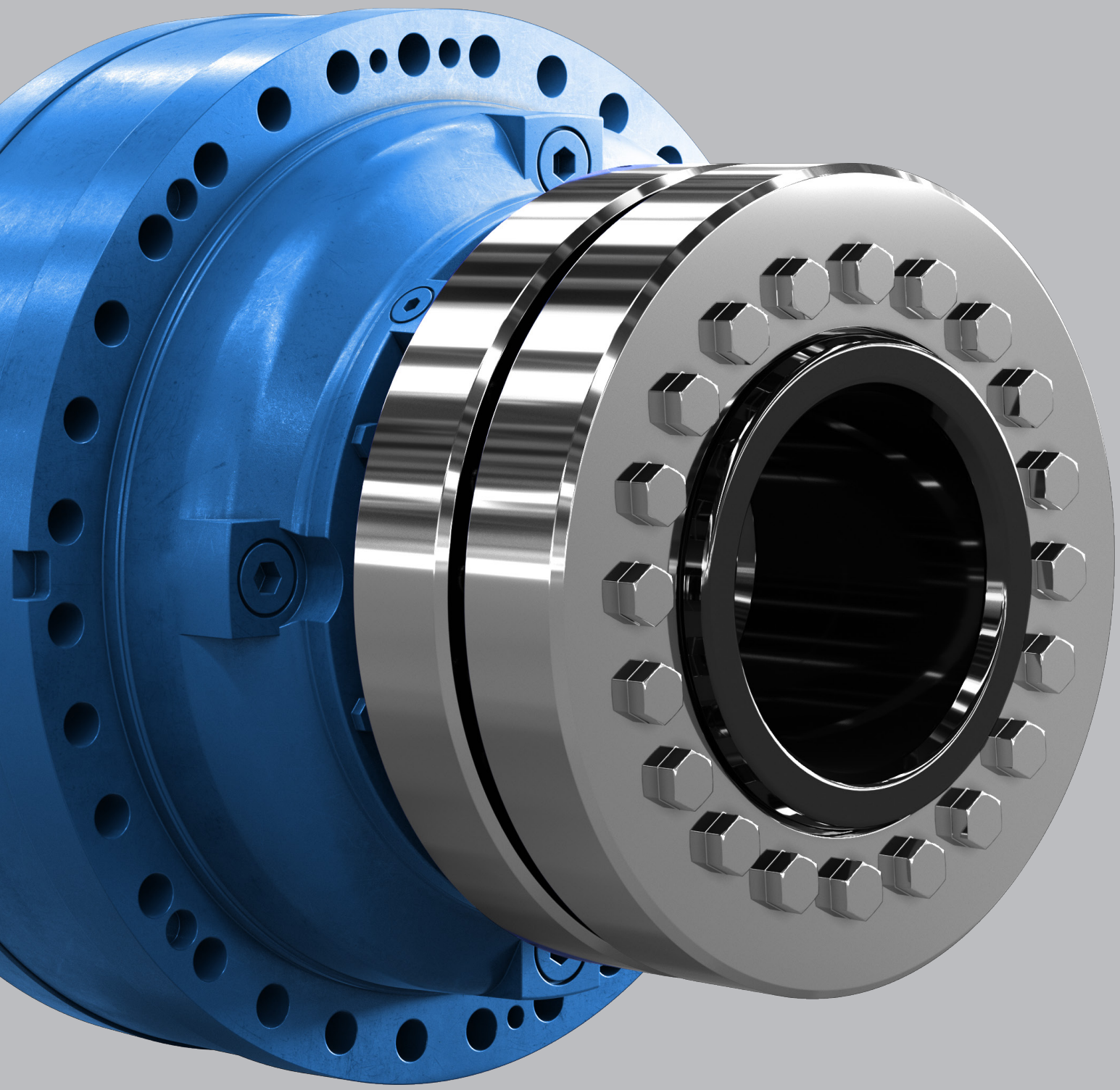

Maximum performance

We drive the heaviest applications worldwide

Sustainability

We care about environment

Modular system

For cost–effective and high quality solutions

Innovation

We are constantly thinking forward, solutions for an evolving industry

Digitalization

Rossi for You is always at your disposal for any info

Know-how

We support you through interdisciplinary know-how

Customization

Cost-effective solutions starting from standard products

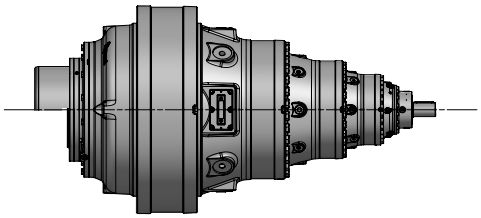

Planetary					
Size	M_{N2max}	M_{2max}	Ratio		Weight *
	[kN m]	[kN m]	from	to	[kg]
2EL 1060	1060	1800	19,9	28,6	4900
3EL 1060			83,1	168	5100
4EL 1060			348	1006	5150
5EL 1060			1223	5900	5200
3EL 1500	1500	2500	83,3	140	7020
4EL 1500			341	818	7070
5EL 1500			1199	4802	7120
3EL 2120	2120	3800	83,3	171	10020
4EL 2120			349	1006	10320
5EL 2120			1427	5891	10370
3EL 3000	3000	5400	94,8	136	16340
4EL 3000			396	798	16390
5EL 3000			1655	4790	16440

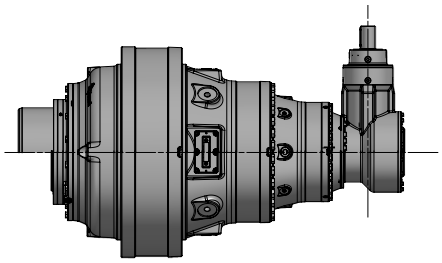

Planetary + Bevel Helical stage					
Size	$M_{N2\ max}$	M_{2max}	Ratio		Weight *
	[kN m]	[kN m]	from	to	[kg]
4EB 1060	1060	1800	208	838	5400
5EB 1060			871	5029	5400
5EB 1500	1500	2500	852	4092	7170
5EB 2120	2120	3800	869	5029	10520
5EB 3000	3000	5400	991	3991	16440

* Valid for Z and H output designs only.

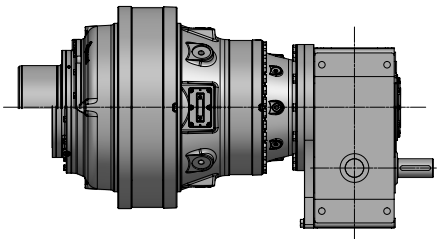

Combined units (Planetary + Helical gear reducer)					
Size	M_{N2max}	M_{2max}	Ratio		Weight *
	[kN m]	[kN m]	from	to	[kg]
1EL 1060 + 2I 5000			66,7	118	11300
2EL 1060 + I 360	1060	1800	45,6	598	6500
3EL 1060 + I/2I 250			166	3082	5800
1EL 1500 + 2I 5601			67,6	122	10970
2EL 1500 + 2I 4000	1500	2500	196	524	8970
3EL 1500 + I/2I 280			192	2801	7670
1EL 2120 + 2I 6301			68,1	110	15520
2EL 2120 + 2I 4500	2120	3800	227	598	12020
3EL 2120 + I/2I 320			162	2846	12520
2EL 3000 + 2I 5000			317	562	22340
3EL 3000 + I/2I 360	3000	5400	217	2849	17340
4EL 3000 + I/2I 250			792	14676	16840

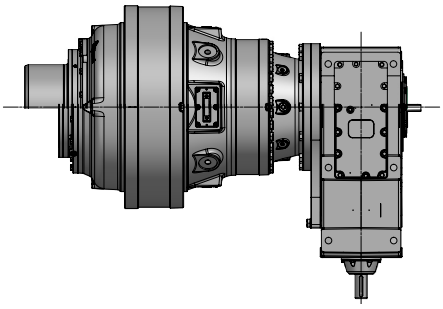

Combined units (Planetary + Bevel Helical gear reducer)					
Size	M_{N2max}	M_{2max}	Ratio		Weight *
	[kN m]	[kN m]	from	to	[kg]
1EL 1060 + C2I 5000			106	476	11500
2EL 1060 + CI/C2I 360	1060	1800	159	3748	6500
3EL 1060 + CI/C2I 250			332	19231	5800
1EL 1500 + C2I 5601			121	596	11270
2EL 1500 + CI/C2I 4000	1500	2500	154	2376	9170
3EL 1500 + CI/C2I 280			679	17536	7670
1EL 2120 + C2I 6301			137	481	15920
2EL 2120 + CI/C2I 4500	2120	3800	162	3003	12320
3EL 2120 + CI/C2I 320			325	17756	11320
2EL 3000 + C2I 5000			503	2268	22540
3EL 3000 + CI/C2I 360	3000	5400	759	17849	17640
4EL 3000 + CI/C2I 250			1583	91578	16540

* Valid for Z and H output designs only.

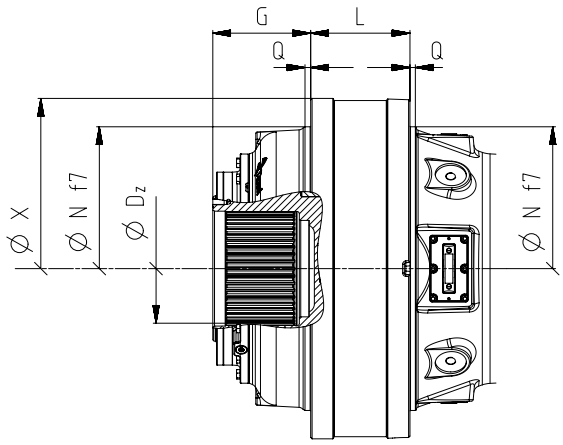

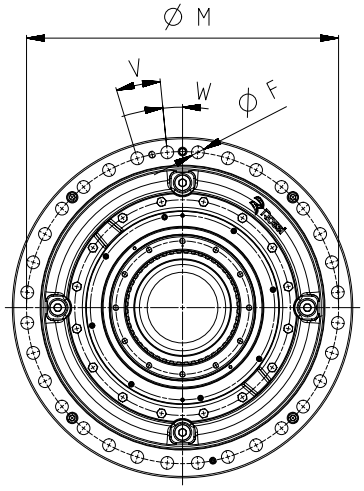

Suggested mating dimensions

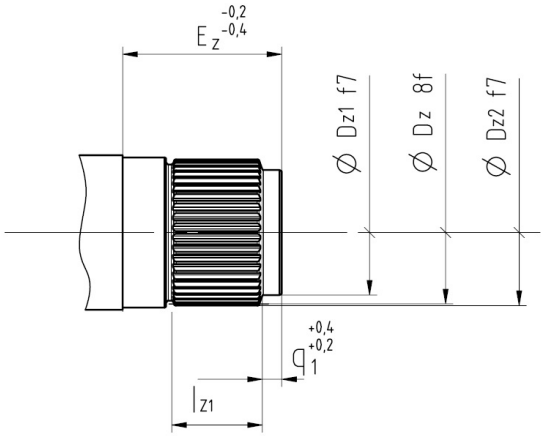

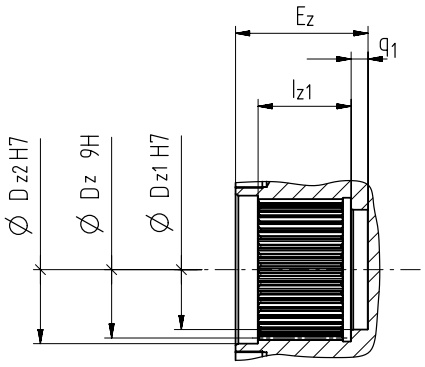

Size	Ordering code *	X	N	G	Q	L	M	V	W	F
1060	**Z400M1 F05o**	1200	1000	345	22	350	1100	32 x 11,25°	5,625°	45
1500	**Z460M1 F05p**	1360	1150	400	25	400	1260	36x10°	5°	45
2120	**Z500M1 F05q**	1560	1320	440	30	440	1440	36x10°	5°	50
3000	**Z600M1 F05r**	1770	1500	530	35	500	1630	36x10°	5°	60

Size	D_z (DIN 5480)	D_{z1}	D_{z2}	E_z	l_{z1}	q_1
1060	**400x8x30x48**	340	405	340	260	35
1500	**460x8x30x56**	390	465	390	300	37
2120	**500x8x30x61**	420	505	430	330	44
3000	**600x10x30x58**	510	605	510	400	50

* For full designation details see page 2.2 cat. EP.

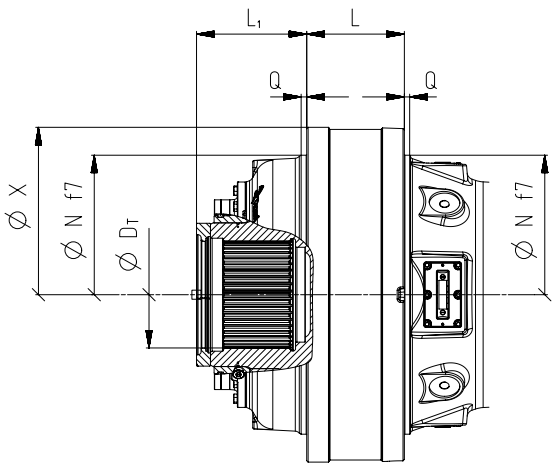

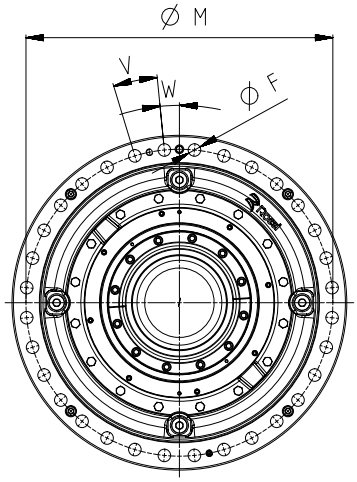

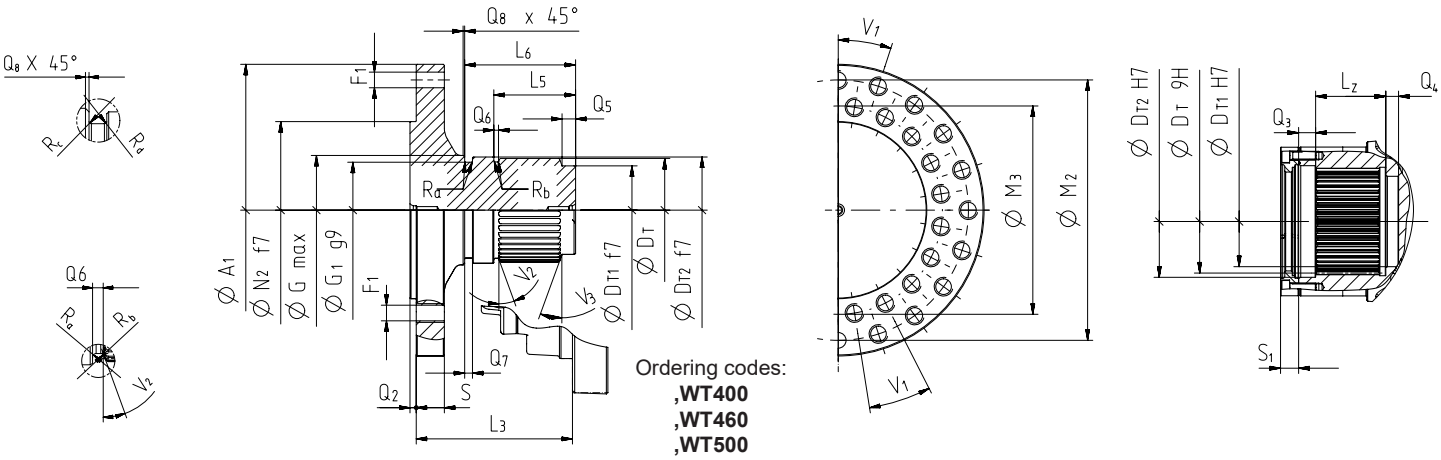

Ordering codes:
,WT400
,WT460
,WT500
,WT600

Size	Ordering code *	X	N	N_2	A_1	S	L_3	L_1	Q	L	M	M_2	M_3	V_1	F_1	V	W	F
1060	**T400M1 F05o**	1200	1000	640	990	75	515	345	22	350	1100	890	750	18°	20+20 M42	32 x 11,25°	5,625°	45
1500	**T460M1 F05p**	1360	1150	750	1140	85	600	400	25	400	1260	1040	870	16,364°	22+22 M42	36x10°	5°	45
2120	**T500M1 F05q**	1560	1320	880	1310	90	670	440	30	440	1440	1200	1020	16,364°	22+22 M48	36x10°	5°	50
3000	**T600M1 F05r**	1770	1500	1000	1480	100	780	530	35	500	1630	1350	1150	18°	20+20 M56	36x10°	5°	60

Size	G_{max}	G_1	V_2	V_3	R_a	R_b	R_c	R_d	Q_8	Q_5	Q_6	Q_7	L_5	L_6	D_{T1}	D_T (DIN 5480)	D_{T2}	S_1	Q_2	Q_3	Q_4	L_z
1060	425	380	20°	20°	4	8	2,5	2,5	10	37	11	18	297	372,5	340	400x8x30x48	405	50	15	45	35	260
1500	485	435	20°	20°	4,5	9	3	3	12	40	13	21	342	427	390	460x8x30x56	465	58	18	50	40	300
2120	528	472	20°	20°	4,5	9	3	3	14	47	13	23	377	472	420	500x8x30x61	505	65	20	55	45	330
3000	630	565	20°	20°	6	12	3,5	3,5	15	53	15	27	453	559	510	600x10x30x58	605	72	22	60	50	400

* For full designation details see page 2.2 cat. EP.

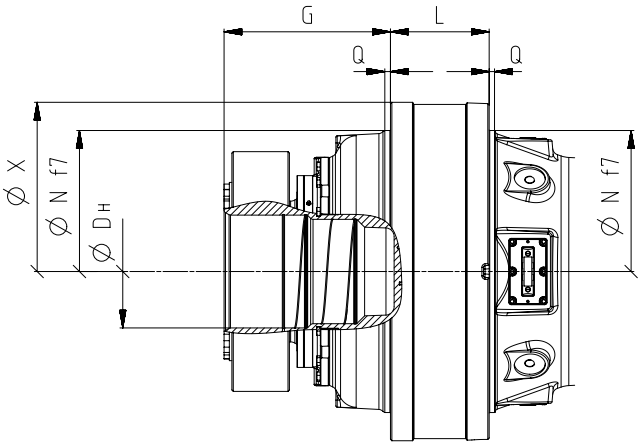

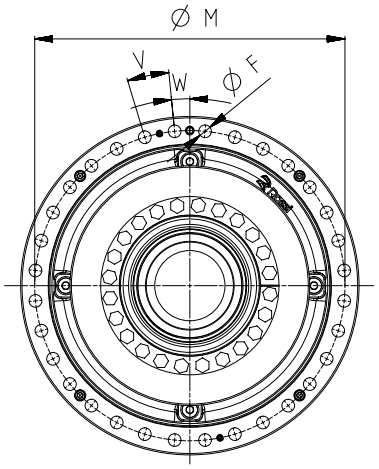

Suggested mating dimensions

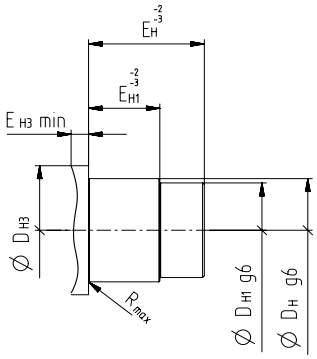

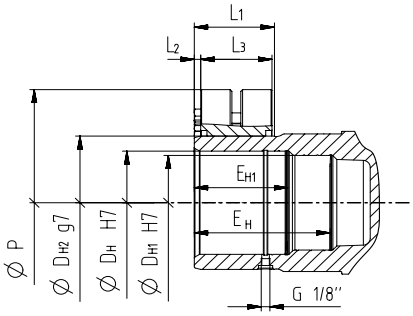

Size	Ordering code *	X	N	G	L	Q	M	V	W	F
1060	**H400M1 A10o**	1200	1000	590	350	22	1100	32 x 11,25°	5,625°	45
1500	**H460M1 A10p**	1360	1150	670	400	25	1260	36x10°	5°	45
2120	**H510M1 A10q**	1560	1320	770	440	30	1440	36x10°	5°	50
3000	**H600M1 A10r**	1770	1500	870	500	35	1630	36x10°	5°	60

Size	D_H	D_{H1}	D_{H2}	D_{H3}		E_H	E_{H1}	E_{H3}	L_1	L_2	L_3	P	R
				min	max								
1060	400	370	500	475	500	460	285	57	248	19	223	850	10
1500	460	425	560	545	560	540	335	57	283	19	258	940	12
2120	510	470	620	600	620	610	390	57	336	19	306	970	13,5
3000	600	555	750	710	750	705	440	63	346	26	320	1230	15

* For full designation details see page 2.2 cat. EP.

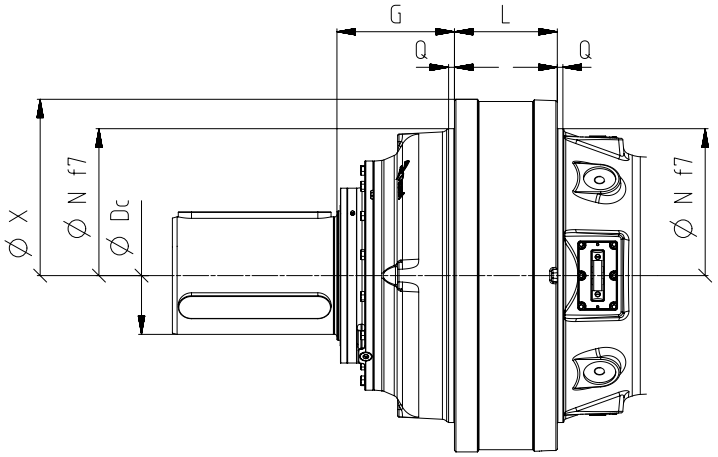

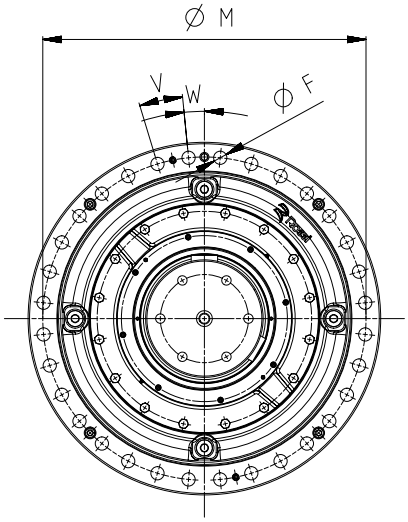

Suggested mating dimensions

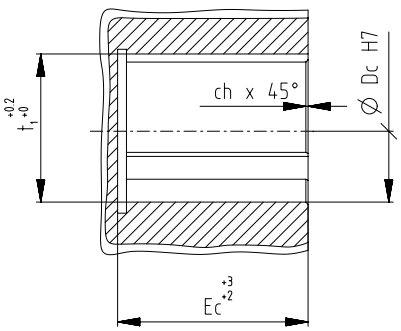

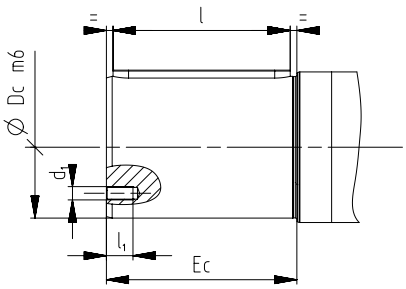

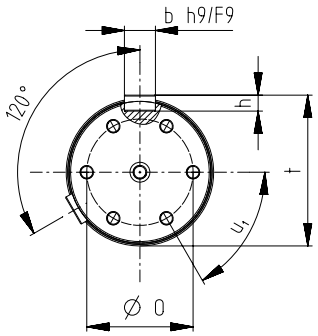

Size	Ordering code *	X	N	G	Q	L	M	V	W	F
1060	**C400M1 F10o**	1200	1000	400	22	350	1100	32 x 11,25°	5,625°	45
1500	**C460M1 F10p**	1360	1150	450	25	400	1260	36x10°	5°	45
2120	**C500M1 F10q**	1560	1320	500	30	440	1440	36x10°	5°	50
3000	**C600M1 F10r**	1770	1500	550	35	500	1630	36x10°	5°	60

Size	D_c	E_c	t_1	d_1	l_1	l	b	h	O	t	u_1	ch
1060	400	560	418	M36	72	520	90	45	300	417	6x60°	8
1500	460	670	480	M42	85	620	100	50	350	479	6x60°	10
2120	500	710	520	M48	96	660	100	50	370	519	6x60°	10
3000	600	850	626	M56	112	800	130	65	450	625	6x60°	12

* For full designation details see page 2.2 cat. EP.

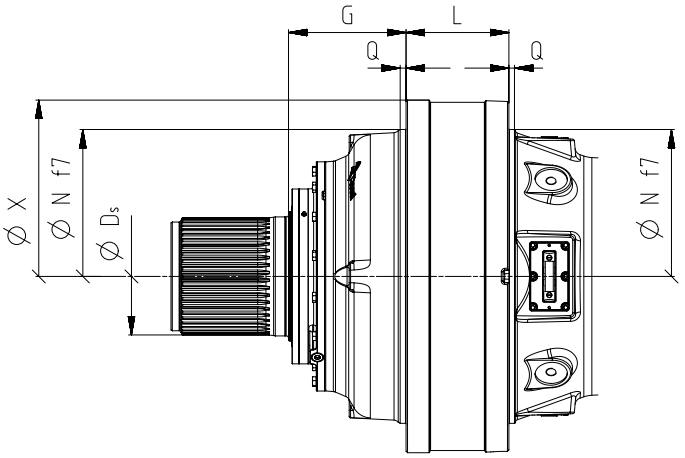

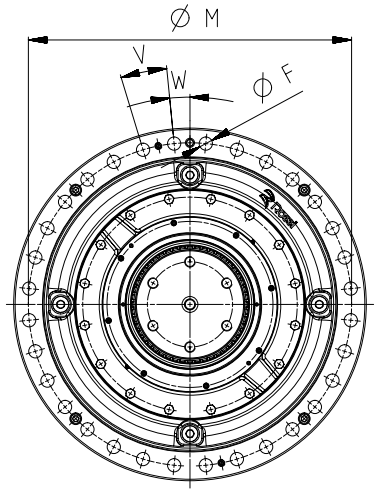

Stop washer

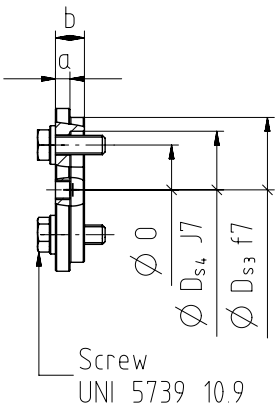

Suggested mating dimensions

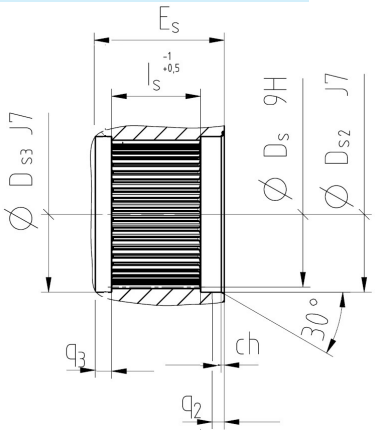

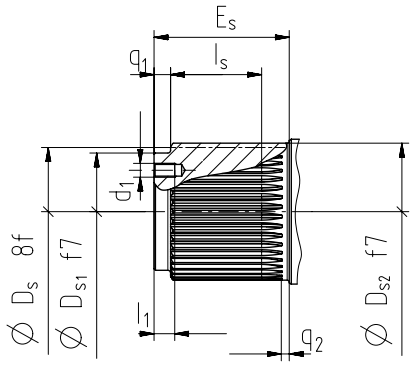

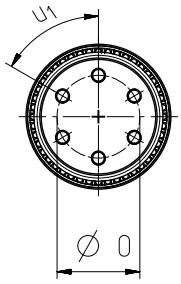

Size	Ordering code *	X	N	G	Q	L	M	V	W	F
1060	**S400M1 F10o**	1200	1000	400	22	350	1100	32 x 11,25°	5,625°	45
1500	**S460M1 F10p**	1360	1150	450	25	400	1260	36x10°	5°	45
2120	**S500M1 F10q**	1560	1320	500	30	440	1440	36x10°	5°	50
3000	**S600M1 F10r**	1770	1500	550	35	500	1630	36x10°	5°	60

Size	D_S (DIN 5480)	D_{S1}	D_{S2}	D_{S3}	D_{S4}	E_S	q_1	q_2	q_3	l_S	ch	a	b	d_1	l_1	u_1	O	screw
1060	**400** x **8** x **30** x **48**	370	405	430	370	400	72	45	35	260	14	42	76	6xM36	72	30°	290	M36x110
1500	**460** x **8** x **30** x **56**	430	465	495	430	460	85	50	40	300	16	48	87	6xM42	85	30°	330	M42x130
2120	**500** x **8** x **30** x **61**	470	505	540	470	500	96	55	45	330	18	52	94	6xM48	96	30°	360	M48x140
3000	**600** x **10** x **30** x **58**	565	605	650	565	600	112	60	50	400	24	63	111	6xM56	112	30°	430	M56x170

* For full designation details see page 2.2 cat. EP.

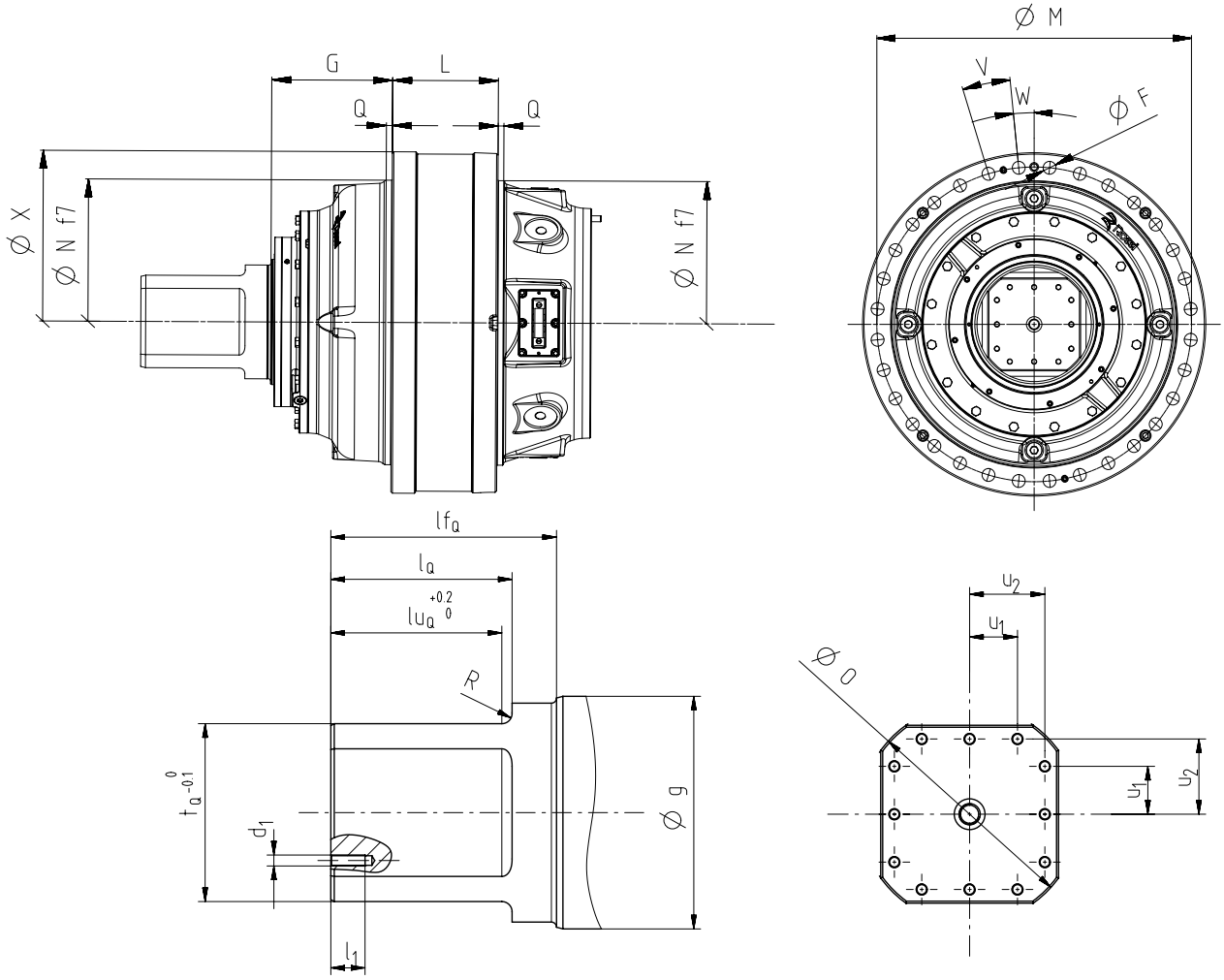

Size	Ordering code *	X	N	G	L	Q	M	V	W	F
1060	**Q400M1 F10**	1200	1000	400	350	22	1100	32 x 11,25°	5,625°	45
1500	**Q460M1 F10**	1360	1150	450	400	25	1260	36x10°	5°	45
2120	**Q500M1 F10**	1560	1320	500	440	30	1440	36x10°	5°	50
3000	**Q600M1 F10**	1770	1500	550	500	35	1630	36x10°	5°	60

Size	t_Q	l_Q	lf_Q	lu_Q	g	l_1	d_1	O	u_1	u_2	R
1060	400	400	430	326	440	45	12xM18	490	85	130	20
1500	460	460	514	390	515	60	12xM24	550	105	158	26
2120	500	500	545	413	570	75	12xM30	605	115	172	32
3000	600	600	652	494	670	90	12xM36	735	138	206	40

* For full designation details see page 2.2 cat. EP.

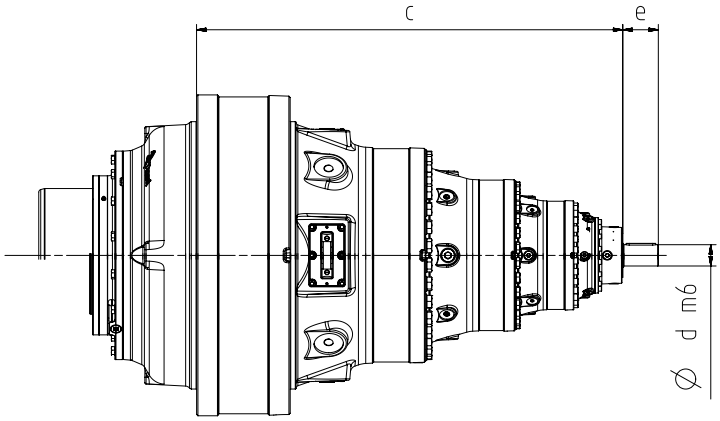

Planetary									
Size	3EL			4EL			5EL		
	c	d	e	c	d	e	c	d	e
1060A	1605	120	165	1618,5	80	130	1676,5	60	105
1500A	1785	140	200	1911,5	100	165	1916,5	70	105
2120A	1984,5	160	240	2086	110	165	2168	80	130
3000A	-	-	-	2465,5	120	165	2479	80	130

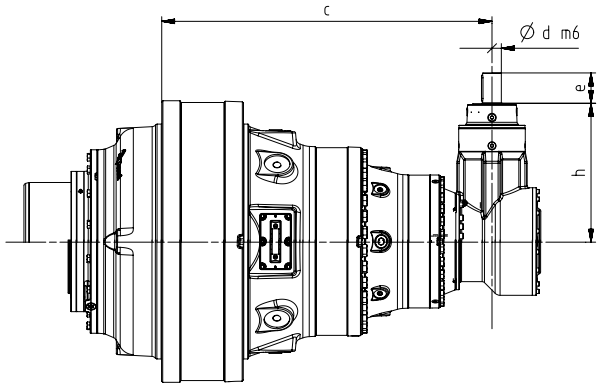

Planetary + Bevel Helical stage								
Size	4EB				5EB			
	c	d	e	h	c	d	e	h
1060A	1436	80	130	589	1581,5	70	105	478
1500A	-	-	-	-	1836,5	70	105	478
2120A	-	-	-	-	2000	80	130	589
3000A	-	-	-	-	2291,5	80	130	589

Main dimensions

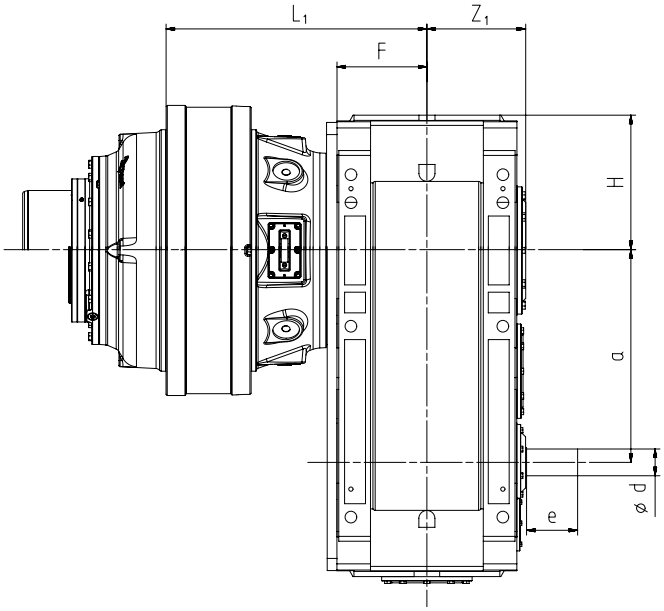

Combined units (Planetary + Helical gear reducer)									
Size	**F**	**L_1 ***	**Z_1**	**H**	**a**	**d**	**e**	**d**	**e**
						$i_N \leq 12,5$		$i_N \geq 14$	
1EL 1060 + 2I 5000	370	1180	410	560	875	-	-	110	210
1EL 1500 + 2I 5601	370	1269	445	560	935	-	-	110	210
1EL 2120 + 2I 6301	406	1383	490	630	1080	-	-	125	210
						$i_N \leq 11,2$		$i_N \geq 12,5$	
2EL 1500 + 2I 4000	296	1647	330	450	700	110	210	90	170
						$i_N \leq 12,5$		$i_N \geq 14$	
2EL 2120 + 2I 4500	296	1765,5	358	450	750	110	210	90	170
2EL 3000 + 2I 5000	370	2062,5	410	560	875	-	-	110	210
						$i_N \leq 3,55$		$i_N \geq 4$	
3EL 1060 + I 250	195	1550,5	206	280	250	90	75	170	140
						$i_N \leq 4$		$i_N \geq 4,5$	
3EL 1500 + I 280	195	1776,5	222	280	280	90	75	170	140
						$i_N \leq 3,55$		$i_N \geq 4$	
3EL 2120 + I 320	241	1976	254	355	320	110	95	210	170
						$i_N \leq 4$		$i_N \geq 4,5$	
3EL 3000 + I 360	241	2283	273	355	360	110	95	210	170
3EL 1060 + 2I 250	195	1550,5	206	280	450	70	140	-	
3EL 1500 + 2I 280	195	1776,5	222	280	480	70	140	-	
3EL 2120 + 2I 320	241	1976	254	355	570	90	170	-	
3EL 3000 + 2I 360	241	2283	273	355	610	90	170	-	
						$i_N \leq 3,55$		$i_N \geq 4$	
4EL 3000 + I 250	195	2426,5	206	280	250	90	75	170	140
4EL 3000 + 2I 250	195	2447,5	206	280	450	70	140	-	

Note: It is possible to define special composition.
*The dimensions may change according to configuration, so please contact Rossi for confirmation.

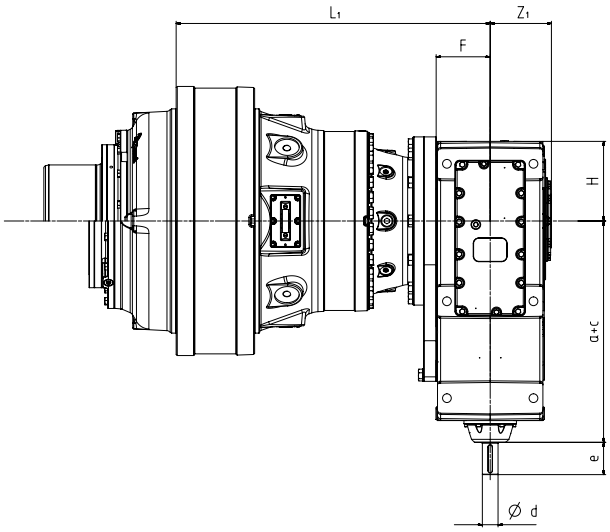

Combined units (Planetary + Bevel Helical gear reducer)									
Size	**F**	**L_1***	**Z_1**	**H**	**d**	**e**	**d**	**e**	**a + c**
1EL 1060 + C2I 5000	370	1180	410	560	$i_N \leqslant 50$ 100 m6	210	$i_N \geqslant 56$ 80 m6	170	875 + 605
1EL 1500 + C2I 5601	370	1269	445	560	$i_N \leqslant 56$ 100 m6	210	$i_N \geqslant 63$ 80 m6	170	935 + 605
1EL 2120 + C2I 6301	406	1383	695	630	$i_N \leqslant 50$ 110 m6	210	$i_N \geqslant 56$ 90 m6	170	1080 + 605
2EL 1060 + CI 360	241	1400,5	273	355	$i_N \leqslant 11,2$ 90 m6	170	$i_N \geqslant 12,5$ 70 m6	140	360 + 480
2EL 1500 + CI 4000	296	1647	330	450	$i_N \leqslant 11,2$ 110 m6	210	$i_N \geqslant 12,5$ 90 m6	170	400 + 605
2EL 2120 + CI 4500	296	1765,5	358	450	$i_N \leqslant 12,5$ 110 m6	210	$i_N \geqslant 14$ 90 m6	170	450 + 605
2EL 1060 + C2I 360	241	1400,5	273	355	$i_N \leqslant 31,5$ 70 m6	140	$i_N \geqslant 35,5 \ldots 63$ 55 m6 $i_N \geqslant 71$ 48 k6	110 110	610 + 245
2EL 1500 + C2I 4000	296	1647	330	450	$i_N \leqslant 50$ 80 m6	170	$i_N \geqslant 56$ 65 m6	140	700 + 480
2EL 2120 + C2I 4500	296	1765,5	358	450	$i_N \leqslant 56$ 80 m6	170	$i_N \geqslant 63$ 65 m6	140	750 + 480
2EL 3000 + C2I 5000	370	2062,5	410	560	$i_N \leqslant 50$ 100 m6	210	$i_N \geqslant 56$ 80 m6	170	875 + 605

Note: It is possible to define special composition.
*The dimensions may change according to configuration, so please contact Rossi for confirmation.

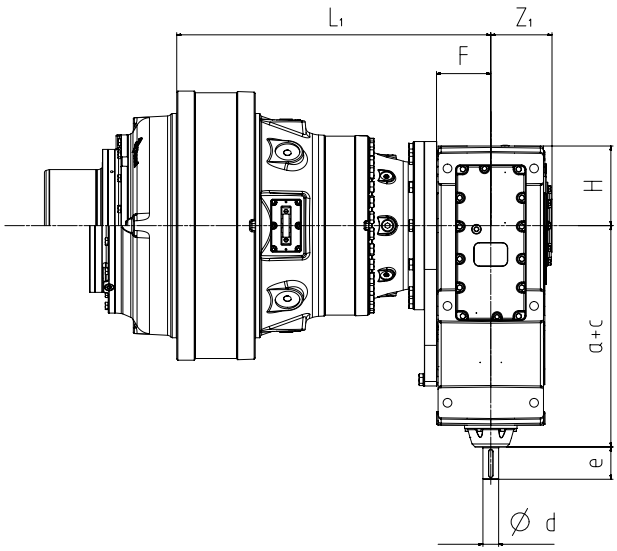

Combined units (Planetary + Bevel Helical gear reducer)										
Size	**F**	**L_1**	**Z_1**	**H**	**a + c**	**d**	**e**	**a + c**	**d**	**e**
					$i_N \leqslant 10$			$i_N \geqslant 11,2$		
3EL 1060 + CI 250	195	1550,5	206	280	380 + 250	70 m6	140	357 + 250	55 m6	110
					$i_N \leqslant 11,2$			$i_N \geqslant 12,5$		
3EL 1500 + CI 280	195	1775,5	222	280	380 + 280	70 m6	140	357 + 280	55 m6	110
					$i_N \leqslant 10$			$i_N \geqslant 11,2$		
3EL 2120 + CI 320	241	1976	254	355	480 + 320	90 m6	170	480 + 320	70 m6	140
					$i_N \leqslant 11,2$			$i_N \geqslant 12,5$		
3EL 3000 + CI 360	241	2283	273	355	360 + 480	90 m6	170	360 + 480	70 m6	140
					$i_N \leqslant 31,5$			$i_N \geqslant 35,5$		
3EL 1060 + C2I 250	195	1550,5	206	280	450 + 305	55 m6	110	450 + 282	48 k6	110
					$i_N \leqslant 31,5$			$i_N \geqslant 35,5$		
3EL 1500 + C2I 280	195	1776,5	222	280	480 + 305	55 m6	110	480 + 282	48 k6	110
					$i_N \leqslant 31,5$			$i_N \leqslant 31,5$		
3EL 2120 + C2I 320	241	1976	254	355	570 + 380	70 m6	140	570 + 357	55 m6	110
					$i_N \leqslant 31,5$			$i_N \geqslant 35,5$		
3EL 3000 + C2I 360	241	2283	273	355	610 + 380	70 m6	140	610 + 357	55 m6	110
					$i_N \leqslant 10$			$i_N \geqslant 11,2$		
4EL 3000 + CI 250	195	2426,5	206	280	250 + 380	70 m6	140	250 + 357	55 m6	110
					$i_N \leqslant 31,5$			$i_N \leqslant 31,5$		
4EL 3000 +C2I 250	195	2447,5	206	280	450 + 305	55 m6	110	450 + 282	48 k6	110

B5

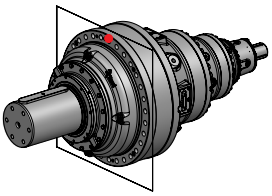

V1*

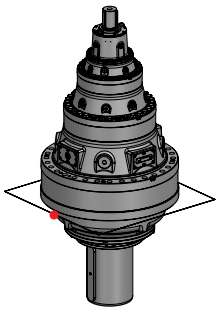

V3**

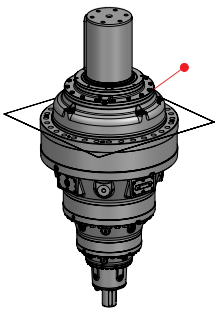

Planetary			
Size	Oil quantity [l]		
	V1	V3	B5
2EL 1060	315	309	158
3EL 1060	301	295	151
4EL 1060	301	295	151
5EL 1060	302	296	151
3EL 1500	397	389	199
4EL 1500	399	391	200
5EL 1500	400	392	200
3EL 2120	499	489	250
4EL 2120	507	497	254
5EL 2120	439	430	220
3EL 3000	830	813	415
4EL 3000	863	846	432
5EL 3000	846	829	423

* Based on the gear reducer size and input type, the expansion tank is required.
** Based on the output design, the expansion tank is required.
● Reference hole for the identification of the mounting position.

Mounting positions & Oil quantities

V3 **

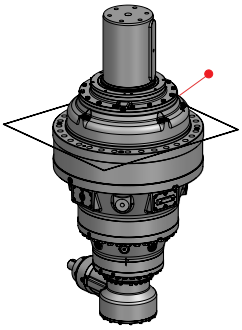

V31 **

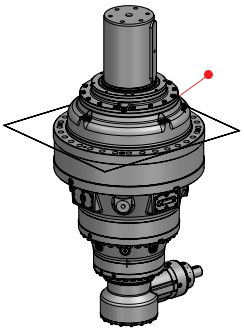

V32 **

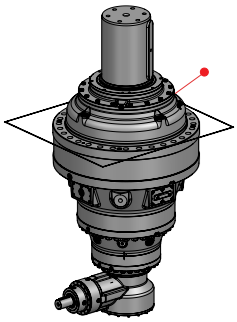

V33 **

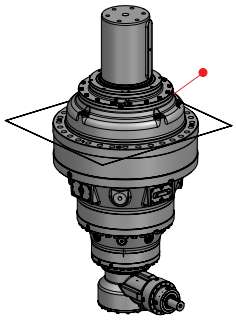

B5

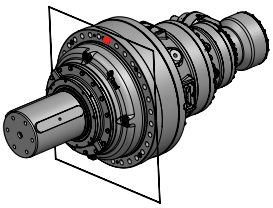

B51 *

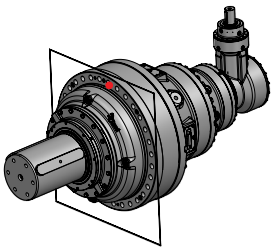

B52

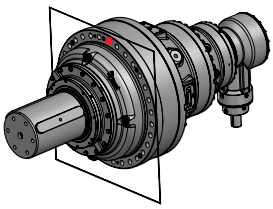

B53

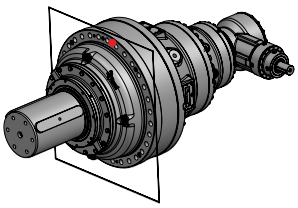

V1

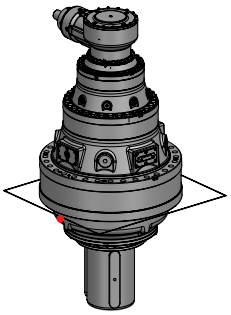

V11

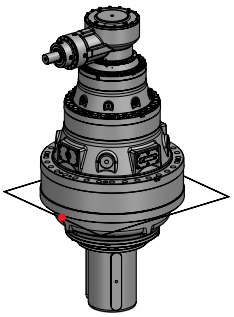

V12

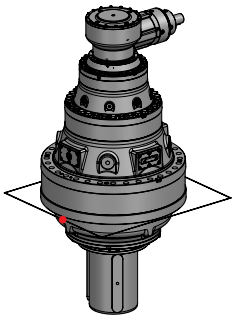

V13

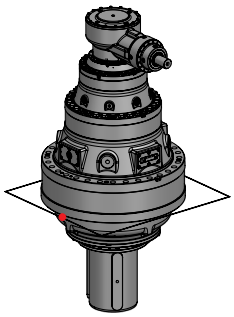

Planetary + Bevel Helical stage			
Size	Oil quantity [l]		
	B51,V1...V3	B52	B5, B53
4EB 1060	321	192	161
5EB 1060	316	175	158
5EB 1500	415	225	208
5EB 2120	488	275	244
5EB 3000	864	463	432

* Based on the gear reducer size and input type, the expansion tank is required.
** Based on the output design, the expansion tank is required.
● Reference hole for the identification of the mounting position.

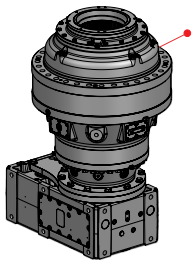

V3

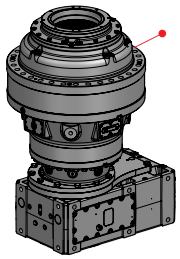

V31

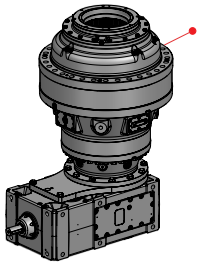

V32

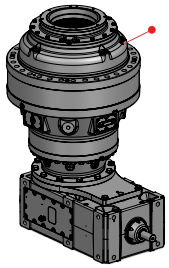

V33

- Reference hole for the identification of the mounting position.

Combined units (Planetary + Helical gear reducer)													
Size	Oil quantity [l]						Size	Oil quantity [l]					
	B5	B51	B52	B53	V3… V33	V1… V13		B5	B51	B52	B53	V3… V33	V1… V13
R 1EL 1060	-	-	-	-	-	-	R 1EL 1060	128,5	128,5	128,5	128,5	257	257
R I 5000							R 2I 5000	265	450	425	265	500	500
2EL 1060	143	143	143	143	286	286	2EL 1060	143	143	143	143	286	286
R I 360	120	127	141	80	150	150	R 2I 360	100	156	140	100	140	140
3EL 1060	147,5	147,5	147,5	147,5	295	295	3EL 1060	147,5	147,5	147,5	147,5	295	295
R I 250	40	52	57	40	35	67	R 2I 250	100	75	67	47	67	67
1EL 1500	-	-	-	-	-	-	1EL 1500	197,5	197,5	197,5	197,5	395	395
R I 5601							R 2I 5601	224	265	450	224	500	450
2EL 1500	-	-	-	-	-	-	2EL 1500	189,5	189,5	189,5	189,5	379	379
R I 4000							R 2I 4000	118	150	224	118	250	236
3EL 1500	198,5	198,5	198,5	198,5	397	397	3EL 1500	198,5	198,5	198,5	198,5	397	397
R I 280	61	65	72	41	36	77	R 2I 280	51	80	72	51	72	72
1EL 2120	-	-	-	-	-	-	1EL 2120	243,5	243,5	243,5	243,5	487	487
R I 6301							R 2I 6301	335	400	670	335	710	630
2EL 2120	-	-	-	-	-	-	2EL 2120	239,5	239,5	239,5	239,5	479	479
R I 4500							R 2I 4500	112	140	236	112	250	224
3EL 2120	249,5	250	250	250	499	499	3EL 2120	249,5	250	250	250	499	499
R I 320	78	102	111	78	67	130	R 2I 320	97	152	137	97	137	137
2EL 3000	-	-	-	-	-	-	2EL 3000	411,5	411,5	411,5	411,5	823	823
R I 5000							R 2I 5000	236	300	450	236	500	500
3EL 3000	415	415	415	415	830	830	3EL 3000	415	415	415	415	830	830
R I 360	80	127	141	120	71	150	R 2I 360	100	156	140	100	140	140
4EL 3000	428,5	428,5	428,5	428,5	857	857	4EL 3000	428,5	428,5	428,5	428,5	857	857
R I 250	40	52	57	40	35	67	R 2I 250	47	75	67	47	67	67

B5

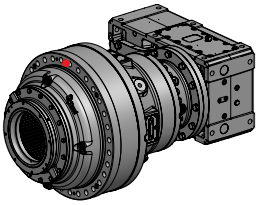

B51

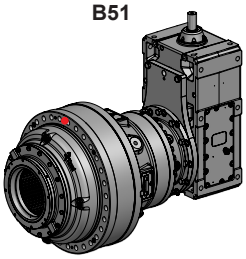

B52

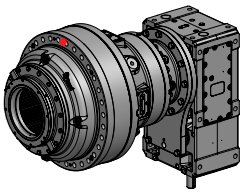

B53

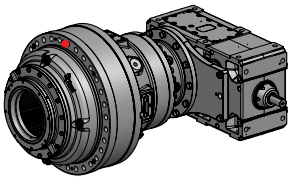

V1

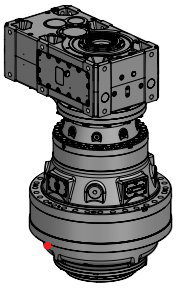

V11

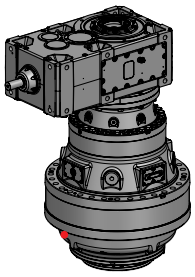

V12

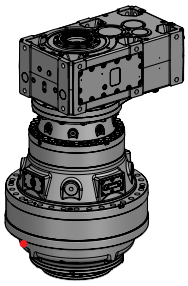

V13

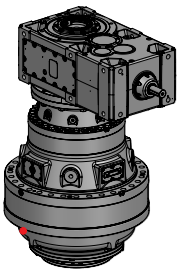

Combined units (Planetary + Bevel Helical gear reducer)													
Size	Oil quantity [l]						Size	Oil quantity [l]					
	B5	B51	B52	B53	V3… V33	V1… V13		B5	B51	B52	B53	V3… V33	V1… V13
R 1EL 1060	-	-	-	-	-	-	R 1EL 1060	128,5	128,5	128,5	128,5	257	257
R CI 5000							R C2I 5000	265	450	425	265	500	500
2EL 1060	143	143	143	143	286	286	2EL 1060	143	143	143	143	286	286
R CI 360	120	127	141	80	150	150	R C2I 360	100	156	140	100	140	140
3EL 1060	147,5	147,5	147,5	147,5	295	295	3EL 1060	147,5	147,5	147,5	147,5	295	295
R CI 250	40	65	72	41	67	67	R C2I 250	100	75	67	100	67	67
1EL 1500	-	-	-	-	-	-	1EL 1500	197,5	197,5	197,5	197,5	395	395
R CI 5601							R C2I 5601	265	450	425	265	475	450
2EL 1500	189,5	189,5	189,5	189,5	379,0	379,0	2EL 1500	189,5	189,5	189,5	189,5	379	379
R CI 4000	100,0	150,0	160,0	100,0	118,0	112,0	R C2I 4000	132	224	224	132	250	224
3EL 1500	198,5	198,5	198,5	198,5	397	397	3EL 1500	198,5	198,5	198,5	198,5	397	397
R CI 280	61	65	72	41	77	77	R C2I 280	51	80	72	51	72	72
1EL 2120	-	-	-	-	-	-	1EL 2120	243,5	243,5	243,5	243,5	487	487
R CI 6301							R C2I 6301	375	630	630	375	710	630
2EL 2120	-	-	-	-	-	-	2EL 2120	239,5	239,5	239,5	239,5	479	479
R CI 4500							R C2I 4500	132	224	224	132	250	224
3EL 2120	249,5	250	250	250	499	499	3EL 2120	249,5	250	250	250	499	499
R CI 320	78	102	111	78	130	130	R C2I 320	97	152	137	97	137	137
2EL 3000	-	-	-	-	-	-	2EL 3000	411,5	411,5	411,5	411,5	823	823
R CI 5000							R C2I 5000	265	450	425	265	500	500
3EL 3000	415	415	415	415	830	830	3EL 3000	415	415	415	415	830	830
R CI 360	120	127	141	80	150	150	R C2I 360	100	156	140	100	140	140
4EL 3000	428,5	428,5	428,5	428,5	857	857	4EL 3000	428,5	428,5	428,5	428,5	857	857
R CI 250	40	65	72	41	67	67	R C2I 250	100	75	67	100	67	67

Solutions for
an evolving
industry

Rossi S.p.A.
Via Emilia Ovest 915/A
41123 Modena - Italy

info@rossi.com
www.rossi.com

2626.CAT.EPKING-24.09-0-EN

© Rossi S.p.A. Rossi reserves the right to make any modification whenever to this publication contents. The information given in this document only contains general descriptions and/or performance features which may not always specifically reflect those described.

The Customer is responsible for the correct selection and application of product in view of its industrial and/or commercial needs, unless the use has been recommended by technical qualified personnel of Rossi, who were duly informed about Customer's application purposes. In this case all the necessary data required for the selection shall be communicated exactly and in writing by the Customer, stated in the order and confirmed by Rossi. The Customer is always responsible for the safety of product applications. Every care has been taken in the drawing up of the catalog to ensure the accuracy of the information contained in this publication, however Rossi can accept no responsibility for any errors, omissions or outdated data. Due to the constant evolution of the state of the art, Rossi reserves the right to make any modification whenever to this publication contents. The responsibility for the product selection is of the Customer, excluding different agreements duly legalized in writing and undersigned by the Parties.